Sanitary Ball Valves

2-Way Ball Valves

The valve is manufactured with CF8M (316) stainless steel. A three piece design with clamp / weld ends and ISO 5211 high mounting pad. Seats are available for both encapsulated and non-encapsulated.

2-Way Ball Valves with V Seat / V Ball

The valves are characterized V seat / V ball 2-Way sanitary control valves. A CF8M (316) three piece encapsulated design with clamp / weld ends and ISO 5211 high mounting pad.

3-Way and 4-Way Ball Valves

The valve is manufactured with CF8M (316) stainless steel. A five piece encapsulated design with clamp / weld ends and ISO 5211 high mounting pad.

Seat Materials for Ball Valves

Description	Material	Applications
Virgin PTFE (V)	Virgin Polytetrafluoroethylene (Food Grade Material)	100% PTFE CME standard seat material. Ideal for most of the sanitary solutions. Specified for applications that require a low-effcient of friction.
RTFE (G)	15% Glass Reinforced Tetrafluoroethylene (Food Grade Material)	15% Glass Filled + 85% PTFE Higher temperature and pressure rating compare to PTFE. Specified for applications that require a higher cycle life than PTFE.
25% carbon PTFE (C)	25% Carbon Reinforced Tetrafluoroethylene (Food Grade Material)	25% Carbon Filled + 75% PTFE Specified for high temperature and pressure applications. Higher cycle life than RTFE. Ideal for steam and thermal fluid applications.
Stainless Steel PTFE (S)	50% Stainless Steel Filled Tetrafluoroethylene (Food Grade Material)	50% Stainless Steel + 50% PTFE Specified for higher temperature and pressure applications in a sanitary process.
UHMW (U)	Ultra-high Molecular Weight Polyethylene (Food Grade Material)	Specified for the low modulus of abrasion and minimal property degradation when explosed to moderate levels of radiation. Ideal for where fluorocarbons are not acceptable.

Pressure Temperature Charts

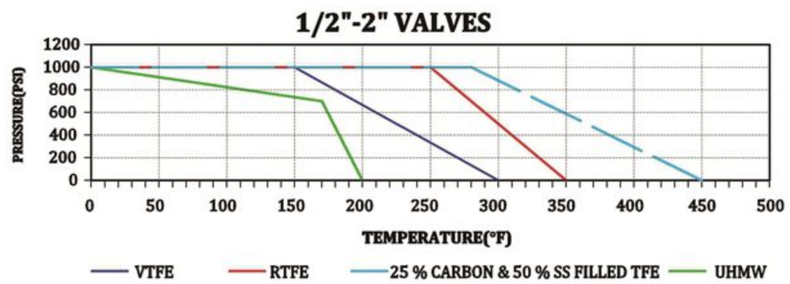

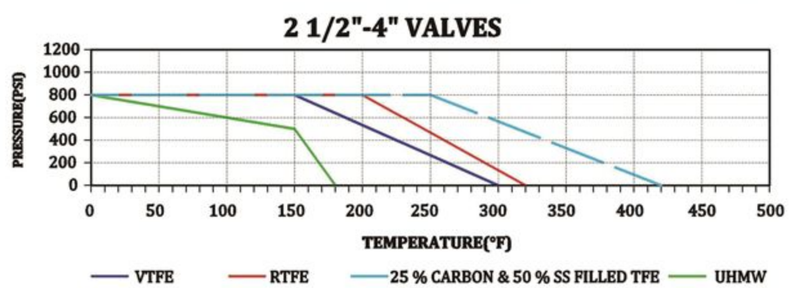

Features and Benefits

- Sizes: 1/2" thru 4"
- Material: CF8M (316) stainless steel
- ID polish: Ra 32uinch minimum
- Blow-out proof stem
- Full port design for a lower pressure drop and less turbulent flow
- Compact design for areas with tight space restrictions
- Balanced non-encapsulated construction minimizes cold flow
- ISO high mounting pad for direct mount automation
- Precision stainless steel balls reduce torque and friction losses while extending seat life
- 100% tested and inspected before shipped
- Pressure rating: 1/2" ~ 2" 1000PSI WOG
  2 1/2" ~ 4" 800PSI WOG

Specifications

information based on water media at 68°F / 20 °C

Size	Weight (lbs)	Assembly Torque (in. lbs.)	Non-Encapsulated Break Torque (in. lbs)	Encapsulated Break Torque (in. lbs)	ISO 5211
1/2"	1.5	160	55	105	F03/F04
3/4"	1.9	160	71	116	F03/F04
1"	2.7	160	101	336	F04/F05
1 1/2"	4.8	200	221	420	F05/F07
2"	8.9	212	345	473	F05/F07
2 1/2"	18.7	221	683	788	F07/F10
3"	29.7	239	830	1155	F10/F12
4"	43.6	266	1323	1680	F10/F12

Vacuum Testing (Virgin PTFE Seats)

Valve Size	Body Leakage (atm-cc/sec)	Helium Leak Rate Test
1/2" ~ 1 1/2"	1×10^{-9}	10^{-5} Torr
2" ~ 4"	1×10^{-7}	10^{-4} Torr

Flow Data

Valve Size	Encapsulated and Non-encapsulated C_v
1/2"	8
3/4"	29
1"	66
1 1/2"	192
2"	434
2 1/2"	723
3"	1124
4"	2100

Sanitary 2-Way Ball Valves

Material List

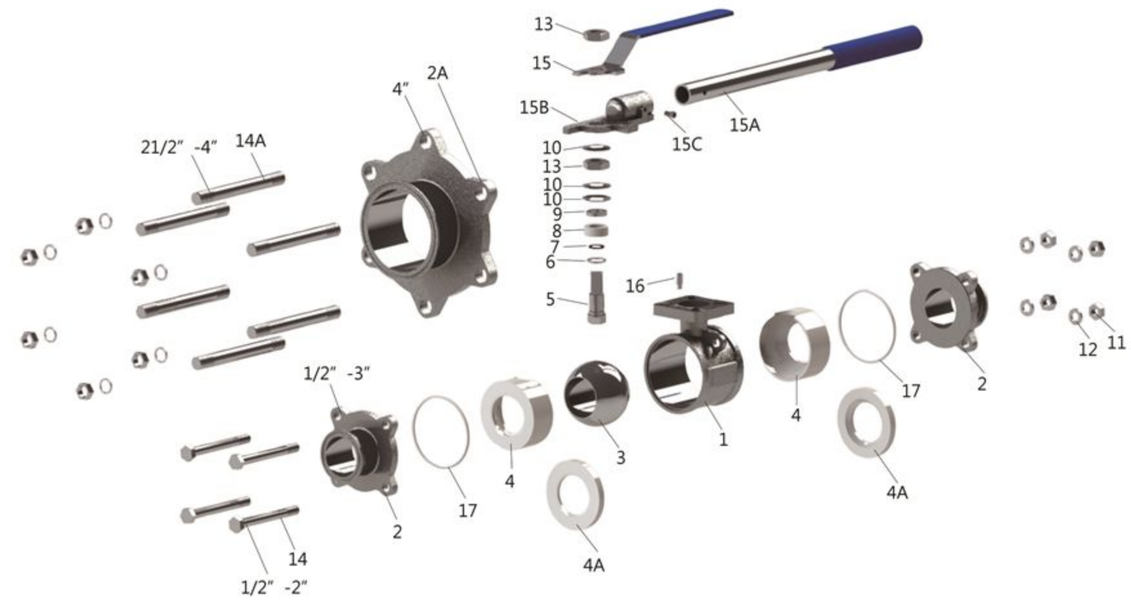

Item	Description	Material	Quantity			
			1/2" - 2"	2 1/2"	3"	4"
1	body	CF8M	1	1	1	1
2	end (4-bolt)	CF8M	2	2	2	n/a
2A	end (6-bolt)	CF8M	n/a	n/a	n/a	2
3	ball	CF8M	1	1	1	1
4	seat (encapsulated)	V, G, C, S, U	2	2	2	2
4A	seat (non-encapsulated)	V, G, C, S, U	2	2	2	2
5	stem	316	1	1	1	1
6	thrust washer	V, G, C, S, U	1	1	1	1
7	O-ring	FKM	1	1	1	1
8	stem packing	V, G, C, S, U	3	3	3	3
9	gland ring	304	1	1	1	1
10	bevel washer	304	3	3	3	3
11	hex nut	304	4	4	8	12
12	bolt washer	304	4	4	8	12
13	nut	304	2	2	2	2
14	bolt	304	4	4	n/a	n/a
14A	bolt (double thread)	304	n/a	n/a	4	6
15	handle	304 / PVC	1	n/a	n/a	n/a
15A	handle (rod)	304 / PVC	n/a	1	1	1
15B	handle head	304	n/a	1	1	1
15C	handle nut	304	n/a	1	1	1
16	stop pin	304	1	1	1	1
17	body seal	V, G, C, S, U	2	2	2	2

Features and Benefits

- Sizes: 1/2" thru 4"
- Material: CF8M (316) stainless steel
- ID polish: Ra 32uinch minimum
- V options: 30° V and 60° V
- Blow-out proof stem
- Precision control
- Full port design for a lower pressure drop and high flow capacity
- Compact design for tight space restrictions
- Interchangeable V port seats and balls
- Balanced encapsulated construction minimizes cold flow
- ISO high mounting pad for direct mount automation
- Precision stainless steel balls reduce torque and friction losses while extending seat life
- 100% tested and inspected before shipped
- Pressure rating: 1/2" ~ 2" 1000PSI WOG
  2 1/2" ~ 4" 800PSI WOG

Specifications

information based on water media at 68°F / 20°C

Size	Weight(lbs)		Assembly Torque	Break Torque	ISO 5211
	V seat	V ball	(in. lbs.)	(in. lbs)	
1/2"	1.5	1.5	160	105	F03/F04
3/4"	1.9	1.9	160	116	F03/F04
1"	2.7	2.7	160	336	F04/F05
1 1/2"	4.8	4.7	200	420	F05/F07
2"	8.9	8.7	212	473	F05/F07
2 1/2"	18.7	18.4	221	788	F07/F10
3"	29.7	29.3	239	1155	F10/F12
4"	43.6	43.0	266	1680	F10/F12

Seat Options

Description	Material	Food Grade Material
Virgin PTFE	Virgin Polytetrafluoroethylene	Yes
RTFE	15% Glass Reinforced Tetrafluoroethylene	Yes
25% Carbon PTFE	25% Carbon Reinforced Tetrafluoroethylene	Yes
Stainless Reinforced PTFE	50% Stainless Steel Filled Tetrafluoroethylene	Yes
UHMW	Ultra-high Molecular Weight Polyethylene	Yes

Features and Benefits

- Sizes: 1/2" thru 4"
- Material: CF8M (316) stainless steel
- ID polish: Ra 32uinch minimum
- Blow-out proof stem
- Full port design (1/2" - 3") for a lower pressure drop and less turbulent flow
- Reduced port design on 4"
- Port options: T port and L port
- Compact design for areas with tight space restrictions
- Balanced encapsulated construction minimizes cold flow
- ISO high mounting pad for direct mount automation
- Precision stainless steel balls reduce torque and friction losses while extending seat life
- 100% tested and inspected before shipped
- Pressure rating: 1/2" ~ 2" 1000PSI WOG
  2 1/2" ~ 4" 800PSI WOG

Specifications

Size	Weight	Assembly Torque	Break Torque (in. lbs.)		ISO 5211	Flow Coefficient (Cv) port configurations		
	(lbs.)	(in. lbs)	L style	T style		L	T branched	T thru
1/2"	3.6	160	62	50	F03 / F04	3.5	3	5.3
3/4"	4.3	160	75	60	F03 / F04	10	8	14
1"	6.8	160	100	80	F04 / F05	20	14	30
1 1/2"	12.6	200	262	210	F05 / F07	52	44	80
2"	21.6	212	535	425	F05 / F07	100	83	150
2 1/2"	33.7	221	1250	1000	F07 / F10	148	108	176
3"	56.4	239	1625	1300	F10 / F12	250	200	320
4"	85.4	266	1875	1500	F10 / F12	450	350	650

Vacuum Testing (Virgin PTFE Seats)

Valve Size	Body Leakage (atm-cc/sec)	Helium Leak Rate Test
1/2" ~ 1 1/2"	1×10^{-9}	10^{-5} Torr
2" ~ 4"	1×10^{-7}	10^{-4} Torr

Sanitary Multi-Port Ball Valves

Dimensions

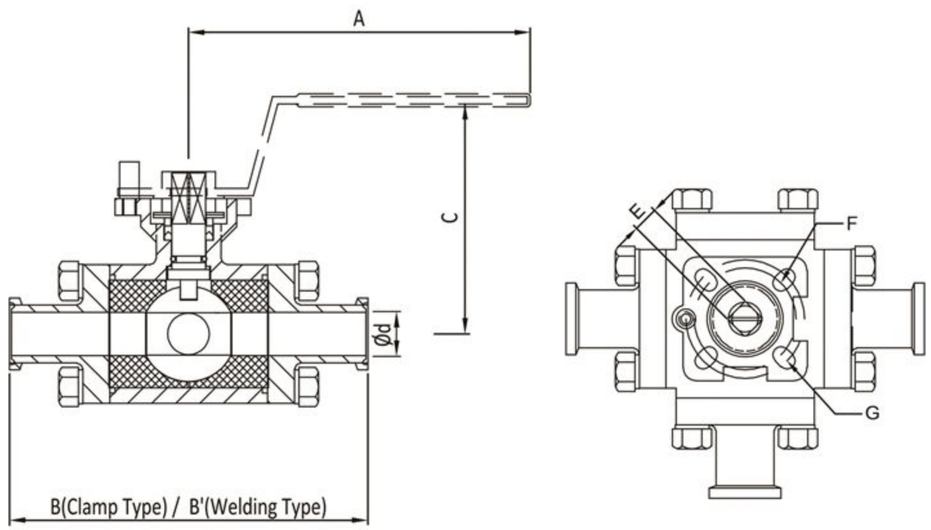

Size	A	B(Clamp Type)	B(Welding Type)	C	⌀d	E	F	G
1/2"	4.764" (121.00mm)	4.646" (118.00mm)	4.646" (118.00mm)	3.071" (78.00mm)	0.374" (9.50mm)	0.354" (9.0mm)	F03	F04
3/4"	4.764" (121.00mm)	5.000" (127.00mm)	5.000" (127.00mm)	3.228" (82.00mm)	0.622" (15.80mm)	0.354" (9.0mm)	F03	F04
1"	5.394" (137.00mm)	6.000" (152.40mm)	6.000" (152.40mm)	3.543" (90.00mm)	0.874" (22.20mm)	0.433" (11.0mm)	F04	F05
1 1/2"	7.165" (182.00mm)	6.890" (175.00mm)	6.890" (175.00mm)	4.331" (110.00mm)	1.378" (35.00mm)	0.551" (14.0mm)	F05	F07
2"	7.165" (182.00mm)	7.874" (200.00mm)	7.874" (200.00mm)	4.516" (114.70mm)	1.874" (47.60mm)	0.551" (14.0mm)	F05	F07
2 1/2"	14.567" (370.00mm)	9.370" (238.00mm)	9.370" (238.00mm)	4.252" (108.00mm)	2.374" (60.30mm)	0.669" (17.0mm)	F07	F10
3"	15.748" (400.00mm)	10.630" (270.00mm)	10.630" (270.00mm)	5.276" (134.00mm)	2.874" (73.00mm)	0.866" (22.0mm)	F10	F12
4"	15.748" (400.00mm)	11.400" (289.56mm)	11.400" (289.56mm)	6.800" (172.72mm)	3.838" (97.48mm)	0.866" (22.0mm)	F10	F12

Material List

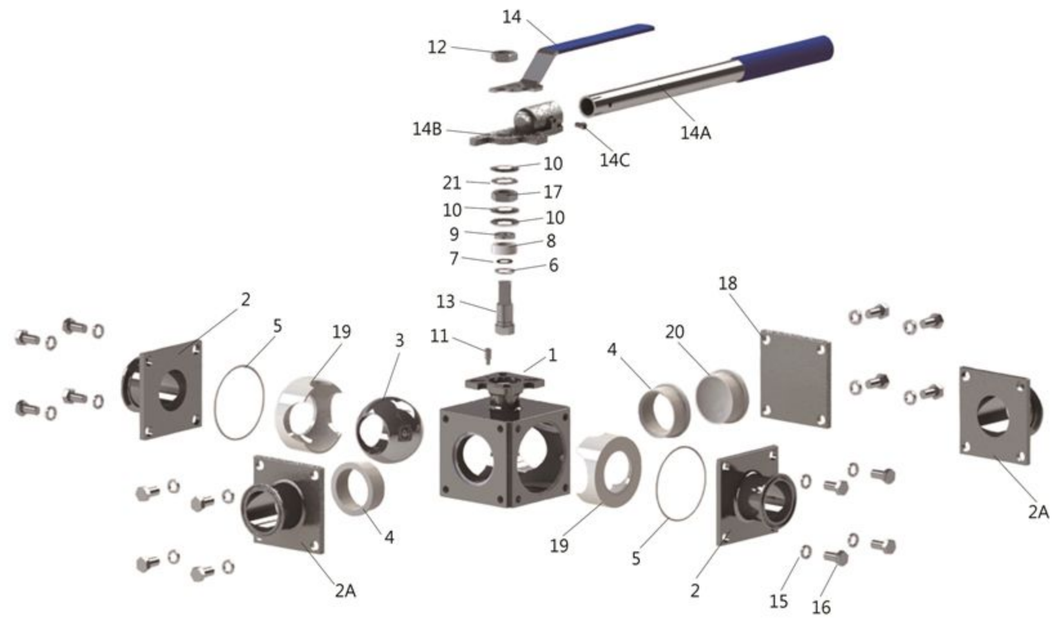

Item	Description	Material	Quantity			
			3-Way		4-Way	
			1/2" - 2"	2 1/2" - 4"	1/2" - 2"	2 1/2" - 4"
1	body	CF8M	1	1	1	1
2	end (large)	CF8M	3	2	4	2
2A	end (small)	CF8M	n/a	1	n/a	2
3	ball	CF8M	1	1	1	1
4	encapsulated seat (small)	V, G, C, S, U	2	2	2	2
5	body seal	V, G, C, S, U	2	2	2	2
6	thrust washer	V, G, C, S, U	1	1	1	1
7	O-ring	FKM	1	1	1	1
8	stem packing	V, G, C, S, U	-	-	-	-
9	gland ring	304	1	1	1	1
10	spring washer	304	2	2	2	2
11	stop pin	304	1	1	1	1
12	nut	304	1	1	1	1
13	stem	316	1	1	1	1
14	handle w/ cover	304 / PVC	1	n/a	1	n/a
14A	handle (rod) w/ cover	304 / PVC	n/a	1	n/a	1
14B	handle head	304	n/a	1	n/a	1
14C	handle screw	304	n/a	1	n/a	1
15	lock washer	304	16	16	16	16
16	bolt	304	16	16	16	16
17	nut (stem packing)	304	1	1	1	1
18	cover plate	CF8M	1	1	n/a	n/a
19	encapsulated seat (large)	V, G, C, S, U	2	2	2	2
20	plug	V, G, C, S, U	1	1	n/a	n/a
21	lock washer	304	n/a	1	n/a	1

2-Way two-piece stainless steel ball valves

The valve is manufactured with CF8M (316) stainless steel. A two-piece design with FNPT ends and ISO 5211 high mounting pad.

2 Way two-piece brass ball valves

The valve is manufactured with brass. A two-piece design with FNPT ends and ISO 5211 high mounting pad.

2 Way three-piece stainless steel ball valves

The valves is manufactured with CF8M (316) stainless steel. A three-piece design with FNPT / socket weld ends and ISO5211 high mounting pad.

Features and Benefits

- Sizes: 1/4" thru 2 1/2"
- Material: CF8M (316) stainless steel
- Blow-out proof stem
- Low torque design
- Full port 1/4" thru 2 1/2"
- ISO high mounting pad
- Temperature range: -40°F to 350°F
- 100% tested and inspected before shipped
- Pressure rating: 1/4" ~ 2" 1000PSI WOG
  2 1/2" 800PSI WOG

Specifications

Size	Weight (lbs)	Break Torque (in. lbs.)
1/4"	0.53	65
3/8"	0.53	86
1/2"	0.66	86
3/4"	1.12	97
1"	1.87	160
1 1/4"	2.76	239
1 1/2"	4.45	398
2"	6.30	600
2 1/2"	11.62	980

Dimensions

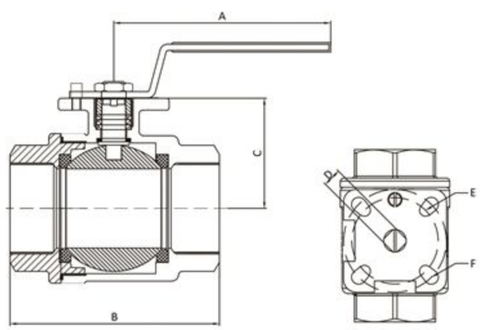

Size	A	B	C	D	E	F
1/4"	4.724" (120.0mm)	2.165" (55.0mm)	1.063" (27.0mm)	0.354" (9.0mm)	F03	F04
3/8"	4.724" (120.0mm)	2.165" (55.0mm)	1.063" (27.0mm)	0.354" (9.0mm)	F03	F04
1/2"	4.724" (120.0mm)	2.402" (61.0mm)	1.181" (30.0mm)	0.354" (9.0mm)	F03	F04
3/4"	4.724" (120.0mm)	2.992" (76.0mm)	1.299" (33.0mm)	0.354" (9.0mm)	F03	F04
1"	4.724" (120.0mm)	3.425" (87.0mm)	1.732" (44.0mm)	0.354" (9.0mm)	F04	F05
1 1/4"	4.724" (120.0mm)	3.937" (100.0mm)	1.850" (47.0mm)	0.354" (9.0mm)	F04	F05
1 1/2"	9.173" (233.0mm)	4.488" (114.0mm)	2.323" (59.0mm)	0.433" (11.0mm)	F05	F07
2"	9.173" (233.0mm)	5.197" (132.0mm)	2.756" (70.0mm)	0.433" (11.0mm)	F05	F07
2 1/2"	9.173" (233.0mm)	6.339" (161.0mm)	3.307" (84.0mm)	0.551" (14.0mm)	F07	F10

Material List

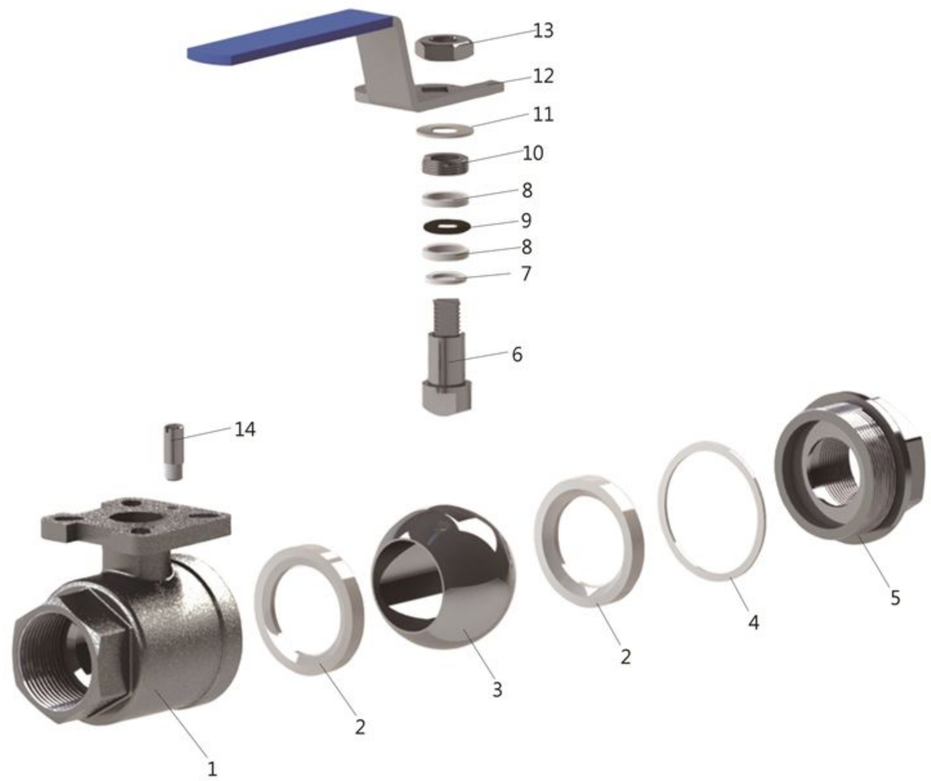

Item	Description	Material	Quantity
1	body	CF8M	1
2	seat	G / C	2
3	ball	316	1
4	body seal	RTFE	1
5	end cap	CF8M	1
6	stem	316L	1
7	thrust washer	G / C	1
8	packing	G / C	2
9	O-ring	Silicone	1
10	gland nut	304	1
11	spring washer	304	1
12	handle	304 / PVC	1
13	handle nut	304	1
14	stop pin	304	1

Features and Benefits

- Sizes: 1/2" thru 4"
- Material: brass 1/2" thru 2"
  bronze 2 1/2" thru 4"
- Blow-out proof stem
- PTFE seats
- Full port 1/2" thru 4"
- ISO high mounting pad
- Maximun temperature: 320°F
- 100% tested and inspected before shipped
- Pressure rating: 600 **PSI** WOG and 150 **PSI** WSP

Specifications

Size	Weight (lbs)	Break Torque (in. lbs.)
1/2"	0.86	86
3/4"	0.91	149
1"	1.55	193
1 1/4"	2.14	290
1 1/2"	3.71	470
2"	5.52	634
2 1/2"	8.83	725
3"	13.29	800
4"	18.32	1062

Dimensions

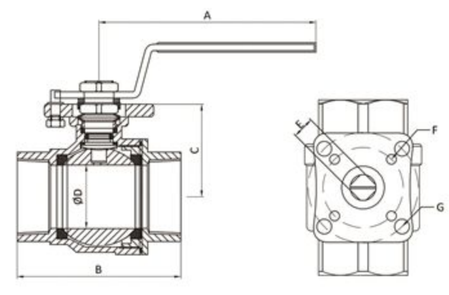

Size	A	B	C	ØD	E	F	G
1/2"	4.331" (110.0mm)	2.165" (55.0mm)	1.516" (38.5mm)	0.591" (15.0mm)	0.354" (9.0mm)	---	F04
3/4"	5.118" (130.0mm)	2.795" (71.0mm)	1.634" (41.5mm)	0.787" (20.0mm)	0.433" (11.0mm)	F04	F05
1"	5.118" (130.0mm)	3.228" (82.0mm)	1.764" (44.8mm)	0.984" (25.0mm)	0.433" (11.0mm)	F04	F05
1 1/4"	7.677" (195.0mm)	3.583" (91.0mm)	2.126" (54.0mm)	1.260" (32.0mm)	0.551" (14.0mm)	F05	F07
1 1/2"	7.677" (195.0mm)	4.055" (103.0mm)	2.323" (59.0mm)	1.575" (40.0mm)	0.551" (14.0mm)	F05	F07
2"	7.677" (195.0mm)	4.764" (121.0mm)	2.646" (67.2mm)	1.969" (50.0mm)	0.551" (14.0mm)	F05	F07
2 1/2"	7.677" (195.0mm)	6.220" (158.0mm)	3.839" (97.5mm)	2.559" (65.0mm)	0.551" (14.0mm)	F07	F10
3"	11.220" (285.0mm)	7.402" (188.0mm)	4.173" (106.0mm)	3.150" (80.0mm)	0.669" (17.0mm)	F07	F10
4"	11.220" (285.0mm)	8.740" (222.0mm)	4.764" (121.0mm)	3.937" (100.0mm)	0.669" (17.0mm)	F07	F10

Material List

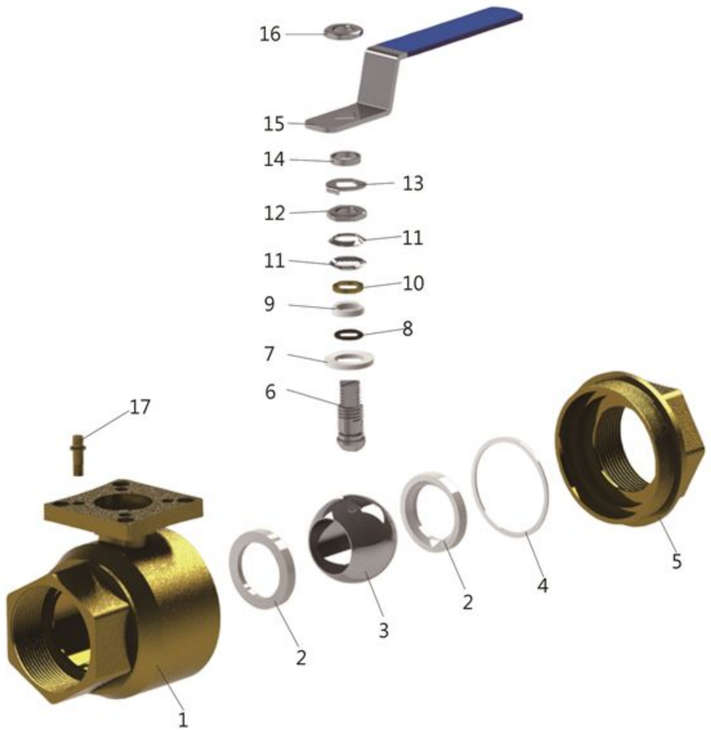

Item	Description	Material		Quantity	
	Size	1/2" - 2"	2 1/2" - 4"	1/2" - 2"	2 1/2" - 4"
1	body	brass	bronze	1	1
2	seat	PTFE	PTFE	2	2
3	ball	Chrome plated brass	304	1	1
4	body seal	PTFE	n/a	1	1
5	end cap	brass	bronze	1	1
6	stem	304	304	1	1
7	thrust washer	PTFE	PTFE	1	1
8	O-ring	FKM	EPDM	1	2
9	packing	PTFE	PTFE	1	1
10	gland ring	brass	brass	1	1
11	spring washer	304	304	2	1
12	gland nut	304	n/a	1	n/a
13	washer	304	n/a	1	n/a
14	handle washer	304	n/a	1	n/a
15	handle	304 / PVC	steel / PVC	1	1
16	handle nut	304	steel	1	1
17	stop pin	brass	brass	1	1

Features and Benefits

- Sizes: 1/4" thru 4"
- Material: CF8M (316) stainless steel
- Swing out design for easy maintenance
- Low torque design
- Full port 1/4" thru 4"
- ISO high mounting pad
- Temperature range: -40°F to 350°F
- 100% tested and inspected before shipped
- Pressure rating: 1/4" ~ 2" 1000PSI WOG
  2 1/2" ~ 3" 800PSI WOG
  4" 600PSI WOG

Specifications

Size	Weight (lbs)	Break Torque (in. lbs.)	ISO 5211
1/4"	1.00	40	F03 / F04
3/8"	1.10	40	F03 / F04
1/2"	1.26	47	F03 / F04
3/4"	1.57	67	F03 / F04
1"	2.27	165	F04 / F05
1 1/4"	3.44	265	F04 / F05
1 1/2"	5.51	481	F05 / F07
2"	7.58	728	F05 / F07
2 1/2"	14.11	900	F07 / F10
3"	24.69	1000	F07 / F10
4"	48.50	1482	F07 / F10

Dimensions

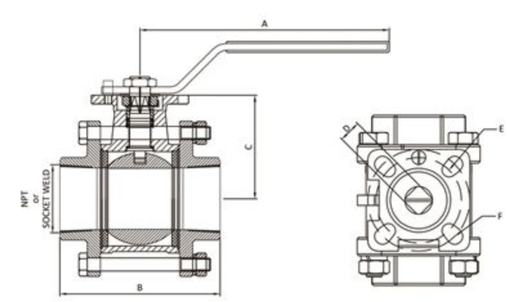

Size	A	B	C	D	E	F
1/4"	4.724" (120.0mm)	2.520" (64.0mm)	1.535" (39.0mm)	0.354" (9.0mm)	F03	F04
3/8"	4.724" (120.0mm)	2.520" (64.0mm)	1.535" (39.0mm)	0.354" (9.0mm)	F03	F04
1/2"	4.724" (120.0mm)	2.835" (720mm)	1.654" (42.0mm)	0.354" (9.0mm)	F03	F04
3/4"	4.724" (120.0mm)	3.110" (79.0mm)	1.890" (48.0mm)	0.354" (9.0mm)	F03	F04
1"	5.354" (136.0mm)	3.307" (84.0mm)	2.165" (55.0mm)	0.433" (11.0mm)	F04	F05
1 1/4"	5.354" (136.0mm)	4.134" (105.0mm)	2.362" (60.0mm)	0.433" (11.0mm)	F04	F05
1 1/2"	9.173" (233.0mm)	4.409" (112.0mm)	2.756" (70.0mm)	0.551" (14.0mm)	F05	F07
2"	9.173" (233.0mm)	5.118" (130.0mm)	3.386" (86.0mm)	0.551" (14.0mm)	F05	F07
2 1/2"	17.323" (440.0mm)	6.654" (169.0mm)	4.291" (109.0mm)	0.669" (17.0mm)	F07	F10
3"	17.323" (440.0mm)	7.323" (186.0mm)	4.685" (119.0mm)	0.669" (17.0mm)	F07	F10
4"	17.323" (440.0mm)	8.898" (226.0mm)	4.528" (115.0mm)	0.669" (17.0mm)	F07	F10

Material List

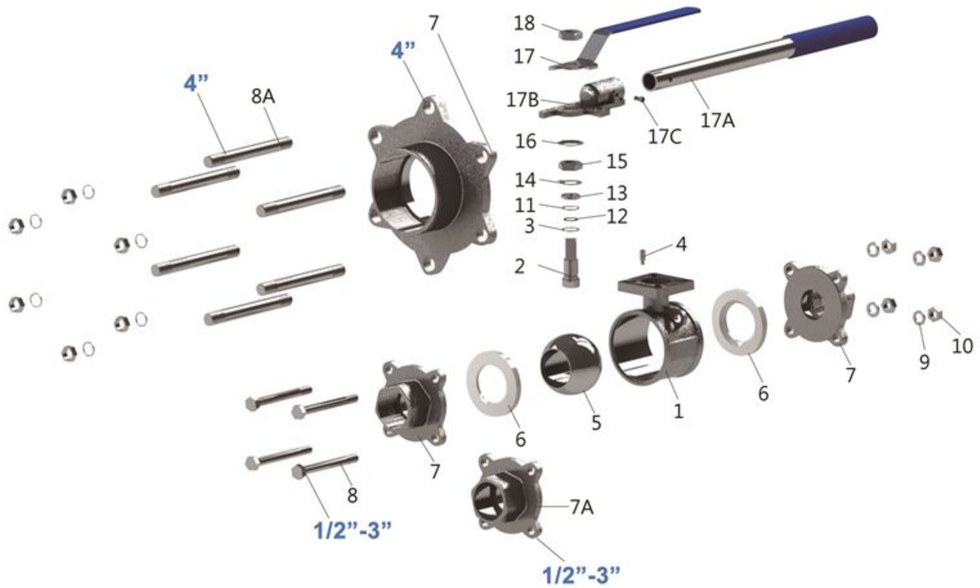

Item	Description	Material	Quantity		
			1/4" - 2"	2 1/2" - 3"	4"
1	body	CF8M	1	1	1
2	stem	316	1	1	1
3	thrust washer	G / C	1	1	1
4	stopper	304	1	1	1
5	ball	316	1	1	1
6	seat	G / C	2	2	2
7	end (FNPT)	CF8M	2	2	2
7A	end (socket weld)	CF8M	2	2	2
8	body bolt	304	4	4	n/a
8A	body bolt	304	n/a	n/a	6
9	bolt washer	304	4	4	12
10	bolt nut	304	4	4	12
11	stem packing	G / C	2	2	2
12	O-ring	Silicone	1	1	1
13	gland bushing	304	1	1	1
14	tab washer	304	1	1	1
15	gland nut	304	1	1	1
16	spring washer	304	1	1	1
17	handle	304 / PVC	1	1	n/a
17A	handle rod	304 / PVC	n/a	1	1
17B	handle hub	304	n/a	1	1
17C	hub bolt	304	n/a	1	1
18	handle nut	304	1	1	1

Features and Benefits

- Sizes: 1/2" thru 8"
- Material: forged 316L stainless steel for body and disc
- Low resistance to flow
- Bi-directional flow
- Various manual or automatic operators available
- Polyacetal bushings for the valve disc reduce friction and increase cycle life
- All wetted surfaces are sanitary finished ≤ 32Ra
- Repaire kits available from 1/2" to 8"
- Seat options: EPDM, Silicone, FKM (1/2" thru 4")
- 100% tested and inspected before shipped

Specifications

Information supplied based on water media at 68°F/20°C

Size	Break Torque (in. lbs.)			Pressure Rating (PSI)	Flow Coefficient (C_v)	Weight w/ Pull Handle (lbs.)
	Silicone	EPDM	Viton			
1/2"	20	75	70	140	7	2.2
3/4"	20	75	70	140	11	2.2
1"	20	75	70	140	23	2.2
1 1/2"	40	130	125	140	80	2.9
2"	55	165	175	140	230	3.5
2 1/2"	70	210	220	110	264	3.7
3"	165	350	310	110	372	4.4
4"	350	540	450	85	800	9.0
6"	700	1550	n/a	60	1200	13.6
8"	n/a	1650	n/a	60	2800	18.5

Dimensions

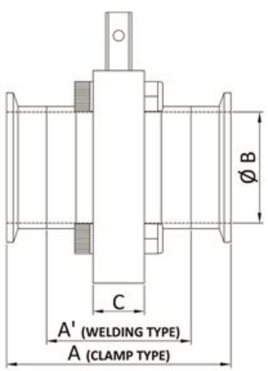

Size	A(CLAMP TYPE)	A'(WELDING TYPE)	B	C
1/2"	3.512"(89.2mm)	1.874"(47.6mm)	0.370"(9.4mm)	0.866"(22.0mm)
3/4"	3.512"(89.2mm)	1.874"(47.6mm)	0.622"(15.8mm)	0.866"(22.0mm)
1"	3.512"(89.2mm)	1.874"(47.6mm)	0.874"(22.2mm)	0.866"(22.0mm)
1 1/2"	3.512"(89.2mm)	1.874"(47.6mm)	1.370"(34.8mm)	0.866"(22.0mm)
2"	3.780"(96.0mm)	2.063"(52.4mm)	1.870"(47.5mm)	0.866"(22.0mm)
2 1/2"	3.827"(97.2mm)	2.118"(53.8mm)	2.370"(60.2mm)	0.866"(22.0mm)
3"	4.134"(105.0mm)	2.500"(63.5mm)	2.866"(72.8mm)	1.181"(30.0mm)
4"	4.819"(122.4mm)	3.177"(80.7mm)	3.830"(97.3mm)	1.181"(30.0mm)
6"	5.512"(140.0mm)	3.827"(97.2mm)	5.780"(146.8mm)	1.181"(30.0mm)
8"	4.882"(124.0mm)	3.827"(97.2mm)	7.782"(197.7mm)	1.181"(30.0mm)

Material List

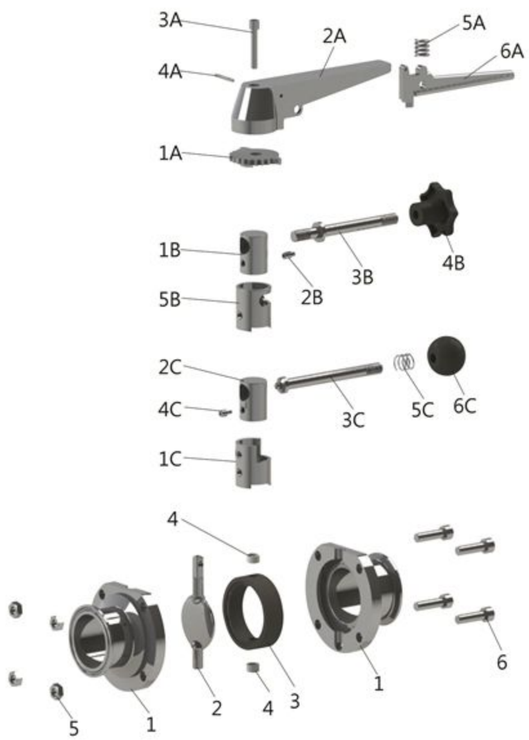

Item	Description	Material	Quantity
Trigger Handle			
1A	sprocket	CF8	1
2A	handle	CF8	1
3A	hex socket bolt	304	1
4A	pin	304	1
5A	spring	304	1
6A	trigger	CF8	1
Infinite Handle			
1B	hub	CF8	1
2B	set screw	304	1
3B	handle shaft	304	1
4B	knob	polymer	1
5B	hub housing	CF8	1

Item	Description	Material	Quantity
Pull Handle			
1C	hub housing	CF8	1
2C	hub	CF8	1
3C	handle shaft	304	1
4C	set screw	304	1
5C	spring	304	1
6C	knob	polymer	1
Valve			
1	body	316L	2
2	disc	316L	1
3	seat	silicone	1
		EPDM	
		FKM	
4	bushing	polyacetal	2
5	hex nut	304	4/6
6	bolt	304	4/6

Features and Benefits

- Excellent protection and corrosion resistance
- 100% fully tested
- Can be mounted on all butterfly valves up to 4"

Specifications

Description	Weight (lbs)	Air Consumption (in^3)		Output Torque (in-lb)	Maximum Pressure rating (in-lb)	Supply Pressure Pressure rating (in-lb)	Air Fitting Ports
		down stroke CW	up stroke CCW				
VC-double acting	5.1	8.5	20	550	120	80-100	1/8" NPT
VC-spring return	6	8.5	18.5	550	120	80-100	1/8" NPT

Dimensions

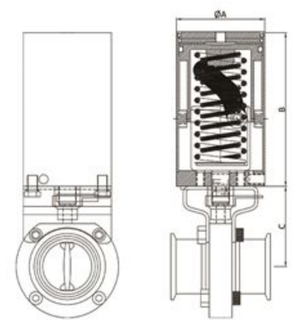

Size	⌀A	B	C
1/2"~1"	3.347"(85.00mm)	5.827"(148.00mm)	2.697"(68.50mm)
1 1/2"	3.347"(85.00mm)	5.827"(148.00mm)	2.697"(68.50mm)
2"	3.347"(85.00mm)	5.827"(148.00mm)	3.047"(77.40mm)
2 1/2"	3.347"(85.00mm)	5.827"(148.00mm)	3.457"(87.80mm)
3"	3.347"(85.00mm)	5.827"(148.00mm)	3.638"(92.40mm)
4"	3.347"(85.00mm)	5.827"(148.00mm)	4.488"(114.00mm)

Material Lists

Item	Description	Material	Quantity	
			SR	DA
1	body	304	1	1
2	drive	304	1	1
3	inner spring	302	1	0
4	outer spring	302	1	0
5	piston	aluminum alloy	1	1
6	end cap	304	1	1
7	top cap	304	1	1
8	needle bearing (body)	304	2	2
8A	needle bearing (drive)	304	2	2
9	thrust bearing	304	2	1
10	O-ring (drive)	EPDM	1	1
11	thrust washer	304	1	0
12	O-ring (piston)	EPDM	1	1
13	O-ring (end cap)	EPDM	1	1
14	retaining ring	304	1	1
15	air fitting	brass	1	2

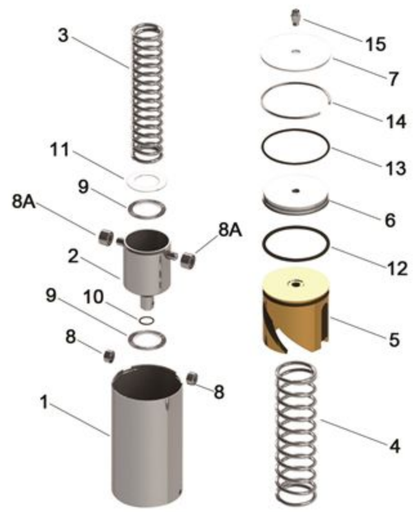

Y-Ball Check Valves

The Valves are used where full flow and low pressure drop of product during processing. When the flow stops, the PTFE ball rolls back and seats to prevent backflow. The two-piece body design is available from sizes 1 1/2" to 3".

Air-Blow Check Valves

The valves are used to clear lines of product or CIP solutions. Air connections with 1/4" air quick coupler, 1" hose barb and 1/2" FNPT for the choice. The air-blow check valve is available in size 1" to 4".

Air Relief Valves

The Valves are used for bleeding of air on the suction side of pumps.

Tank Vent Valves

The valves are used for relieving pressure as the fluid level rises while filling the tank and relieving vacuum as the fluid level drops while empty the tank.

Features and Benefits

3A 58-01 1796

- Sizes 1 1/2" thru 3"
- All metal product contact surface are 316L stainless steel.
- Polished ID and OD to 3A standards.
- PTFE ball provides a better heat and abrasion resistance.
- Repaire kits are available for seat replacement.
- Easy cleaning without tools.
- Two piece design for better alignment.
- Air blow check valve can be added.
- Maximum operating pressure: 150 PSI
- Operating temperature range: 15°F to 200°F

Specifications

Valve Size	Weight (lbs)	Cap Size	Clamp Size	Cap Gasket	Ball Diameter	Cracking Pressure inches (H2O)		Seating Pressure (PSI)		Flow Coefficient
						Vertical	Horizontal	Vertical	Horizontal	(C_v)
1 1/2"	4.9	2.0	2.0	2.0	1.6	2.0	0.5	3.6	3.9	60
2"	6.6	2.5	2.5	2.5	2.1	2.5	0.5	2.6	3.7	80
2 1/2"	10.5	3.0	3.0	3.0	2.7	3.0	0.5	1.6	2.4	100
3"	17.5	4.0	4.0	4.0	3.6	3.8	0.5	1.9	2.6	140

Dimensions

Size	A	B	C	D	E	F
1 1/2"	7.500" (19.50mm)	1.370" (34.80mm)	1.500" (38.10mm)	3.300" (83.82mm)	1.900" (48.26mm)	2.500" (63.50mm)
2"	8.500" (215.90mm)	18.70" (47.50mm)	2.000" (50.80mm)	3.900" (99.06mm)	2.300" (58.42mm)	3.000" (76.20mm)
2 1/2"	10.000" (254.00mm)	2.370" (60.20mm)	2.500" (63.50mm)	4.500" (114.30mm)	2.900" (73.66mm)	3.600" (91.44mm)
3"	11.500" (292.10mm)	2.870" (72.90mm)	3.000" (76.20mm)	5.300" (134.62mm)	3.800" (96.52mm)	4.700" (119.38mm)

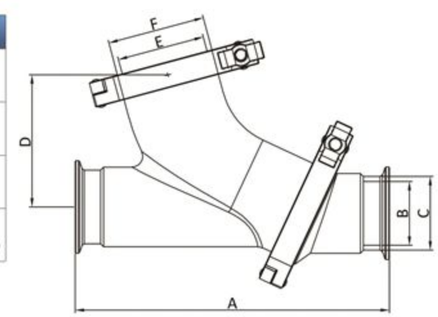

Material List

Item	Description	Material	Quantity
1	angle body	316L	1
2	inlet body	316L	1
3	clamp	CF8	2
4	end cap	316L	1
5	cap gasket	EPDM / FKM	1
6	ball	PTFE	1
7	seat	EPDM or FKM / 316L	1

Features and Benefits

3 58-01 1796

- Sizes from 1" to 4"
- 316L stainless steel offered with EPDM stem seat and gasket.
- Y-ball check valve can be added.
- Maximum operating temperature: 212°F
- Maximum operating pressure: 145 PSI

Sizing When Used with Y-Ball Check Valves

Ball Check Valve Size	Air Blow Check Valve Size
1 1/2"	2"
2"	2 1/2"
2 1/2"	3"
3"	4"

Dimensions

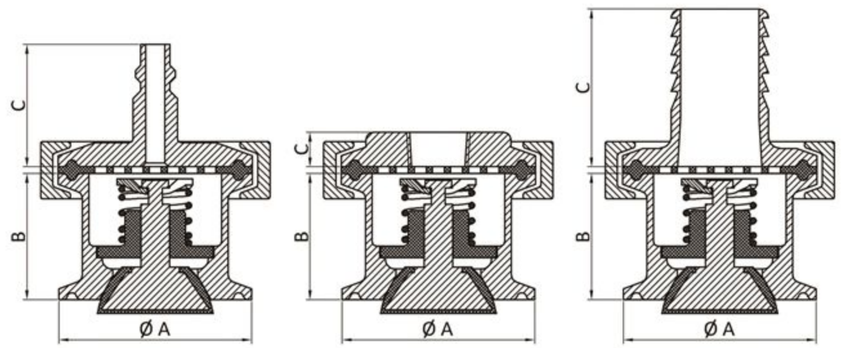

Size	A	B	$C_{(PLUG)}$	$C_{(FNPT)}$	$C_{(HOSE\ BARB)}$
1"	1.984" (50.39mm)	1.299" (33.0mm)	1.260" (32.0mm)	0.626" (15.9mm)	1.689" (43.0mm)
1 1/2"	1.984" (50.39mm)	1.299" (33.0mm)	1.260" (32.0mm)	0.626" (15.9mm)	1.689" (43.0mm)
2"	2.516" (63.91mm)	1.299" (33.0mm)	1.260" (32.0mm)	0.626" (15.9mm)	1.689" (43.0mm)
2 1/2"	3.047" (77.39mm)	1.299" (33.0mm)	1.260" (32.0mm)	0.626" (15.9mm)	1.689" (43.0mm)
3"	3.579" (90.91mm)	1.299" (33.0mm)	1.260" (32.0mm)	0.626" (15.9mm)	1.689" (43.0mm)
4"	4.682" (118.9mm)	1.299" (33.0mm)	1.260" (32.0mm)	0.626" (15.9mm)	1.689" (43.0mm)

Material List

Item	Description	Material	Quantity
1A	1/4" air line quick connect	316L	1
1B	1/2" NPT cap	316L	1
1C	1" hose barb	316L	1
2	single pin clamp	CF8	1
3	valve body	316L	1
4	perforated disc	EPDM / 316L	1
4A	spring retainer	316	1
4B	spring	316	1
4C	stem guide	PTFE	1
4D	stem and plug	EPDM / 316L	1

Features and Benefits

- Standard materials:
  Metal parts- 304 stainless steel
  Ball- Polypropylene
  Gasket- EPDM
- Valve seals for both pressure and vacuum
- Air and water can be directed away by using plastic tube and the valves 1/8" FNPT connection port.
- All product contact surfaces have a radius of 1/4" or better.
- Valve ball is constructed of FDA, 3A approved polypropylene.
- Repair kits are available for the ball and gasket replacement.
- No tools required for assembly and disassembly.
- Other gasket materials available.
- Maximum temperature: 212°F
- Polypropylene ball density = 0.333lb/in^3
- PTFE ball available (density = 0.078lb/in^3)

Specifications

Size	Perssure Rating (PSI)	Description
1 1/2"	145	1 1/2" air relief valve with NPT tap
1 1/2"	145	1 1/2" air relief valve with elbow extension
2"	145	2" air relief valve with NPT tap
2"	145	2" air relief valve with elbow extension

Dimensions

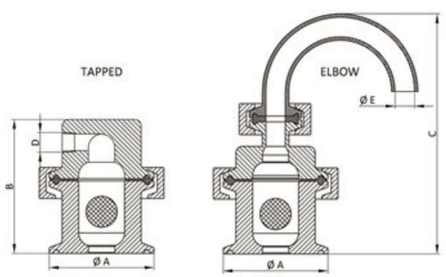

Size	Style	A	B	C	D(THREAD)	E
1 1/2"	TAPPED	1.984" (50.39mm)	1.299" (64.5mm)	---	1/8"-27NPT	---
2"		2.516" (63.91mm)	1.299" (64.5mm)	---	1/8"-27NPT	---
1 1/2"	ELBOW	1.984" (50.39mm)	---	4.488" (114.0mm)	---	0.370" (9.4mm)
2"		2.516" (63.91mm)	---	4.488" (114.0mm)	---	0.370" (9.4mm)

Material List

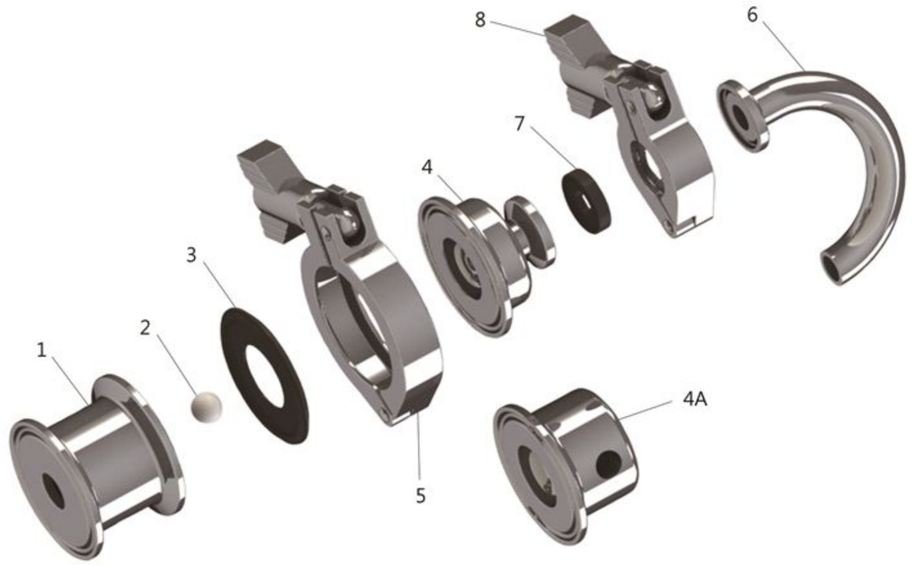

Item	Description	Material	Quantity Required	
			Elbow	Tapped
1	body	304	1	1
2	ball	PP or PTFE	1	1
3	1" gasket	EPDM	1	1
4	3A cover	304	1	n/a
4A	tapped cover	304	n/a	1
5	1 1/2" clamp	CF8	1	1
6	180° tube ferrule	304	1	n/a
7	1/2" gasket	EPDM	1	n/a
8	1/2" clamp	CF8	1	n/a

Features and Benefits

3A 58-01 1796

- Sizes available for 2"- 3"
- Dome helps in preventing external contamination.
- Robust PVC and 304 stainless steel design for light weight.
- Can be used with any clamp gasket.
- Maximum flow rate: 500 GPM
- Vacuum break: 1 PSI
- Pressure relief: 1 PSI

Dimenstions

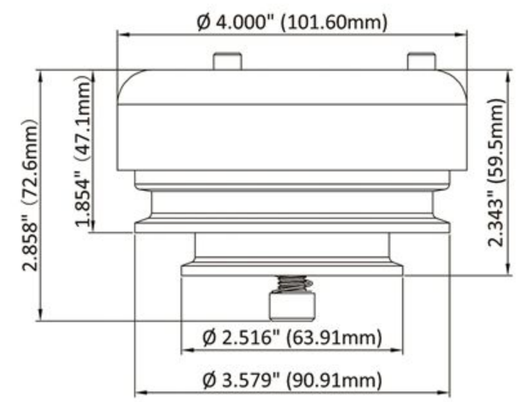

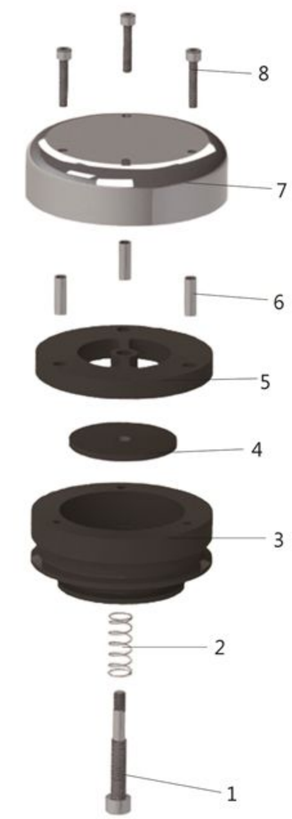

Material Lists

Item	Description	Material	Quantity
1	spring bolt	304	1
2	spring	304	1
3	body	PVC	1
4	check plate	PVC	1
5	flow plate	PVC	1
6	spacer	304	3
7	cap	304	1
8	cap bolt	304	3

Stainless Steel Air & Vacuum Tank Vent Valve

Features and Benefits

- Sizes: 2", 3" or 4"
- Clamp connection for standard while other sanitary connections for option.
- ¼" FNPT connection for gas inlet, plug also supplied.
- Easy to disassemble for cleaning.
- Vacuum break: 2" water column, 0.1 PSI
- Pressure relief: 22" water column, 0.8 PSI
- Maximum temperature and pressure rating: 3 PSI @ 70°F
- Maximum flow rate: 500 GPM

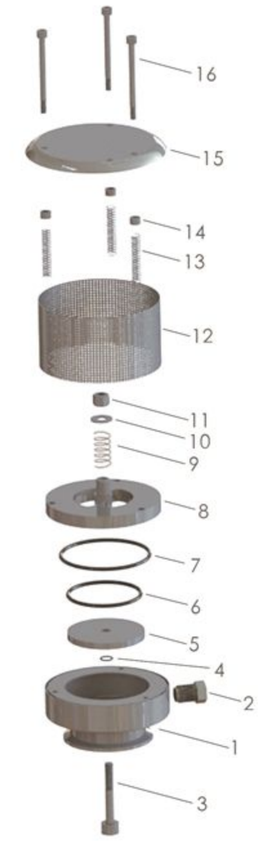

Dimensions

Size	A
2"	63.91
3"	90.91
4"	118.92

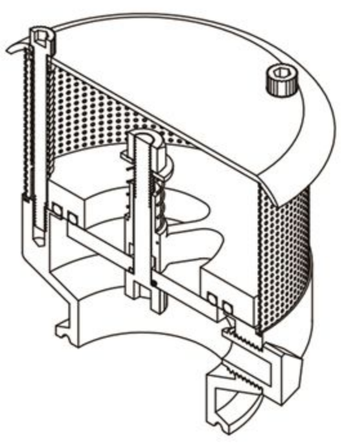

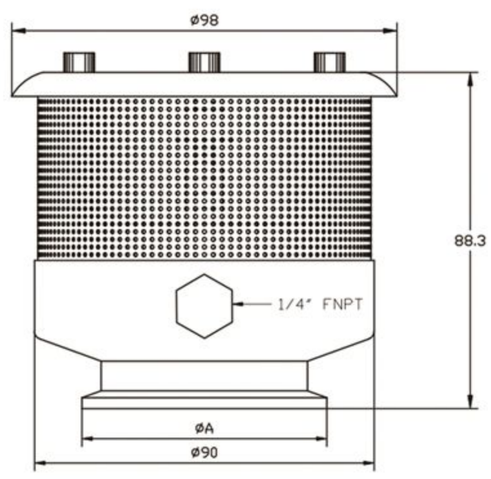

Item	Description	Material	Quantity
1	body	304	1
2	plug	PVC	1
3	vacuum bolt	304	1
4	O-ring (vacuum bolt)	EPDM	1
5	vacuum disc	304	1
6	O-ring (vacuum disc)	EPDM	1
7	O-ring (pressure plate)	EPDM	1
8	pressure plate	304	1
9	vacuum spring	304	1
10	flat washer	304	1
11	nut	304	1
12	screen	304	1
13	pressure plate springs	304	3
14	spacers	304	3
15	cover	304	1
16	cover screws	304	3

Sample Valves

Features and Benefits

- Sizes available 3/8" and 2"
- Material: 304 and 316L stainless steel.
- Double silicone O-rings.
- Silicone or PTFE seat ensures a leak-proof shut-off.
- Surface finish polished to sanitary standards.
- Temperature rating: 300°F
- Pressure rating: 200 PSI

Specifications

Size	Style	Seat Material	Weight (lbs)
3/8"	NPT	Silicone	0.72
3/8"	NPT	PTFE	0.72
1"	Clamp	Silicone	0.88
1"	Clamp	PTFE	0.88
1"	Weld	Silicone	0.72
1"	Weld	PTFE	0.72

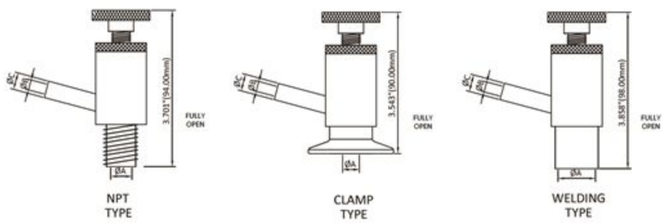

Dimensions

Size	Style	⌀A	⌀B	⌀C	Open
1/4"	NPT	0.354"(9.0mm)	0.236"(6.0mm)	0.394"(10.6mm)	3.701"(94.0mm)
3/8"	NPT	0.370"(9.4mm)	0.236"(6.0mm)	0.394"(10.6mm)	3.701"(94.0mm)
1/2"	NPT	0.370"(9.4mm)	0.236"(6.0mm)	0.394"(10.6mm)	3.701"(94.0mm)
	Clamp	0.370"(9.4mm)	0.236"(6.0mm)	0.394"(10.6mm)	3.543"(90.0mm)
	Welding	0.370"(9.4mm)	0.236"(6.0mm)	0.394"(10.6mm)	3.858"(98.0mm)
3/4"	NPT	0.370"(9.4mm)	0.236"(6.0mm)	0.394"(10.6mm)	3.701"(94.0mm)
	Clamp	0.370"(9.4mm)	0.236"(6.0mm)	0.394"(10.6mm)	3.543"(90.0mm)
	Welding	0.620"(15.8mm)	0.236"(6.0mm)	0.394"(10.6mm)	3.858"(98.0mm)
1"	NPT	0.370"(9.4mm)	0.236"(6.0mm)	0.394"(10.6mm)	3.701"(94.0mm)
	Clamp	0.370"(9.4mm)	0.236"(6.0mm)	0.394"(10.6mm)	3.543"(90.0mm)
	Welding	0.870"(22.1mm)	0.236"(6.0mm)	0.394"(10.6mm)	3.858"(98.0mm)
1 1/2"	NPT	0.370"(9.4mm)	0.236"(6.0mm)	0.394"(10.6mm)	3.701"(94.0mm)
	Clamp	0.370"(9.4mm)	0.236"(6.0mm)	0.394"(10.6mm)	3.543"(90.0mm)
	Welding	1.370"(34.8mm)	0.236"(6.0mm)	0.394"(10.6mm)	3.858"(98.0mm)
2"	NPT	0.370"(9.4mm)	0.236"(6.0mm)	0.394"(10.6mm)	3.701"(94.0mm)
	Clamp	0.370"(9.4mm)	0.236"(6.0mm)	0.394"(10.6mm)	3.543"(90.0mm)
	Welding	1.870"(47.5mm)	0.236"(6.0mm)	0.394"(10.6mm)	3.858"(98.0mm)

Material List

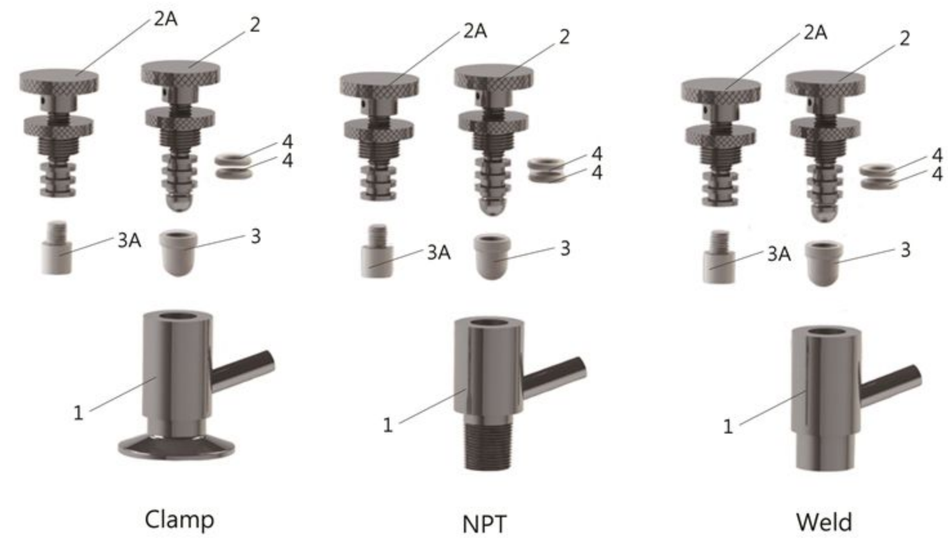

Item	Description	Material	Quantity
1	clamp - body	304 / 316L	1
1	NPT - body	304 / 316L	1
1	weld - body	304 / 316L	1
2	knob / stem assembly	304 / 316L	1
2A	knob / stem assembly	304 / 316L	1
3	seat	silicone	1
3A	seat	PTFE	1
4	O-rings	silicone	2

Features and Benefits

- Sizes available 3/4” & 1 1/2”
- Material: 304 and 316L stainless steel
- Mirror-like finish OD
- Spray pattern: 360°
- Ideal for cleaning all types of tanks and vessels
- Connections available: clamp, NPT, and weld ends

Dimensions

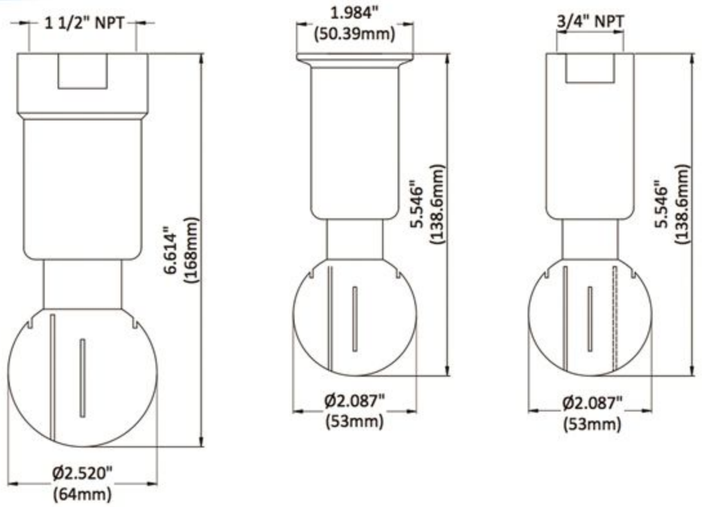

Technical Data

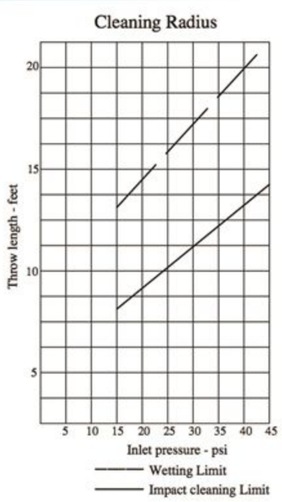

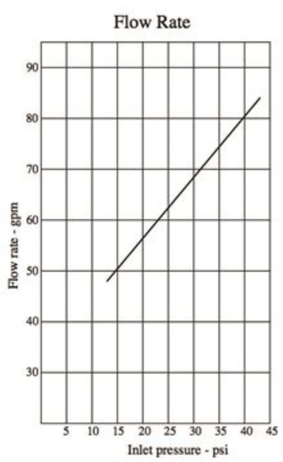

Features and Benefits

- Sizes available 1” & 1 1/2”
- Material: 304 and 316L stainless steel
- Various spray patterns available
- Used in food and beverage for cleaning storage tanks

Dimensions

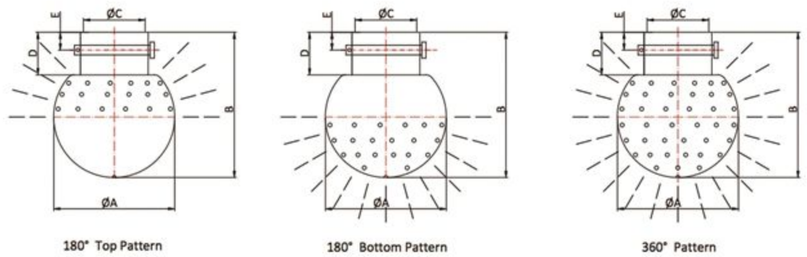

Size	Spray Pattern	Pin Length	Pin Size	ØA	B	ØC	D	E
1"	180° Top	1.470"(37.34mm)	0.226"(5.74mm)	2.520"(64.00mm)	3.039"(77.20mm)	1.004"(25.50mm)	0.945"(24.00mm)	0.394"(10.0mm)
1 1/2"	180° Top	1.950"(49.53mm)	0.226"(5.74mm)	2.953"(75.00mm)	3.543"(90.00mm)	1.508"(38.30mm)	1.039"(26.40mm)	0.433"(11.0mm)
1"	180° Bottom	1.470"(37.34mm)	0.226"(5.74mm)	2.520"(64.00mm)	3.039"(77.20mm)	1.004"(25.50mm)	0.945"(24.00mm)	0.394"(10.0mm)
1 1/2"	180° Bottom	1.950"(49.53mm)	0.226"(5.74mm)	2.953"(75.00mm)	3.543"(90.00mm)	1.508"(38.30mm)	1.039"(26.40mm)	0.433"(11.0mm)
1"	360°	1.470"(37.34mm)	0.226"(5.74mm)	2.520"(64.00mm)	3.039"(77.20mm)	1.004"(25.50mm)	0.945"(24.00mm)	0.394"(10.0mm)
1 1/2"	360°	1.950"(49.53mm)	0.226"(5.74mm)	2.953"(75.00mm)	3.543"(90.00mm)	1.508"(38.30mm)	1.039"(26.40mm)	0.433"(11.0mm)

Technical Data

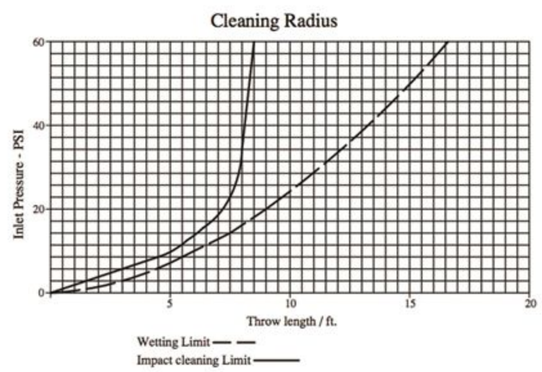

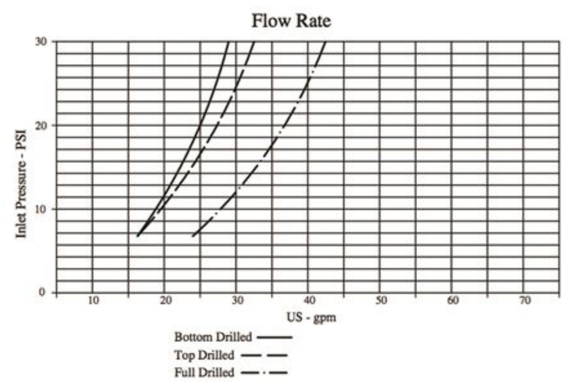

C-Series Sanitary Centrifugal Pump

Standard Constructions

- Volute: stamped 316L stainless steel
- Impeller: 316 stainless steel
- Back plate: 316L stainless steel
- Stub shaft: 316L stainless steel
- Adpater: 304 stainless steel
- Leg kit: 304 stainless steel
- Seal types: externally balanced "D" and "DG" clamped-in seat
- Rotary seal material: carbon (silicon carbide available as option)
- "DG" seal seat material: silicon carbide, ceramic and tungsten carbide
- Elastomers: Buna, EPDM, Silicone and FKM
- Wet end finish: sanitary polish 32 R_a

Seal Options

Features:

- Optional silicon carbide
- Carbon rotating element on sanitary stainless steel
- Suitable for sanitary and industrial applications where fluid is non-abrasive and lubricating

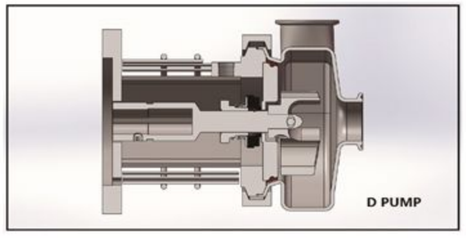

DG Seal - Clamped In Seat

Features:

- Choose from ceramic, silicon carbide and tungsten carbide as the seal
- Suitable for the majority of sanitary applications
- Carbon rotating element on encapsulated seat; silicon rotating element is also available for option

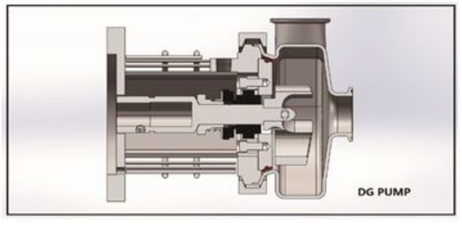

Material List

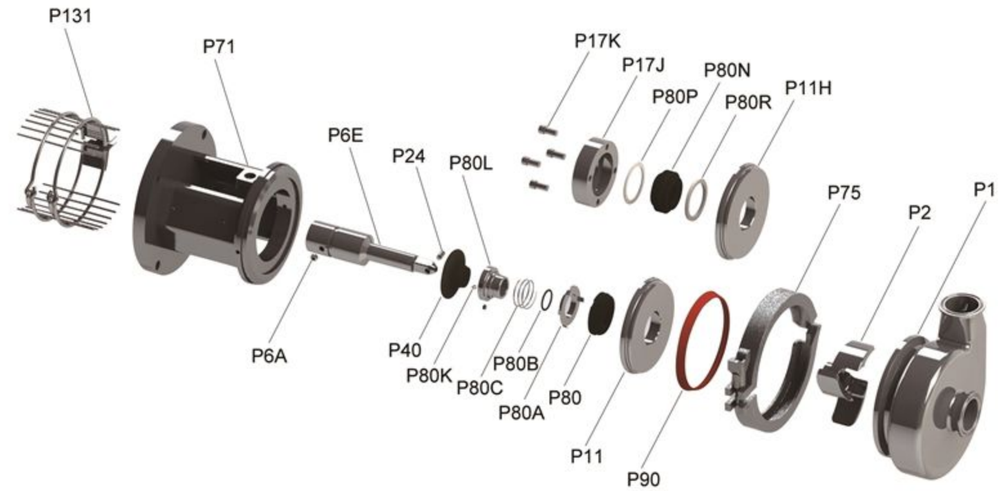

Item	Description	Material	Quantity
P1	casing	316L	1
P2	impeller	CF3M	1
P6E	stub shaft	316L	1
P6A	stub shaft set screw	304	2
P11	back plate - D seal	316L	1
P11F	back plate pin	304	2
P11H	back plate - DG seal	316L	1
P17J	gland ring - DG seal	304	1
P17K	gland bolt - DG seal	304	4
P17M	washer - DG seal	304	4
P24	impeller retainer	316L	1
P71A	adapter pins	304	2
P75	clamp	CF8	1
P80	seal	Carbon	1
		Silicone carbide	
P80A	seal cup	304	1
P80B	O-ring	EPDM	1
		FKM	
		Buna	
		Silicone	
P80C	spring	304	1
P80K	seat screw	304	2
P80L	drive collar	304	1
P80N	seat - DG seal	Silicone carbide	1
		Ceramic	
		Tungsten carbide	
P80P	outboard gasket-DG seal	PTFE	1
P80R	inboard gasket - DG seal	PTFE	1
P90	casing gasket	EPDM	1
		Silicone	
		FKM	